BS 5163 Flanged Resilient OS&Y Gate Valve (XZ41X), PN10/16

NSF/ANSI 61 NSF/ANSI 372

XZ41X

WRAS ACS CE

- Connection Ends: Flange to BS EN 1092-2:1997
- Working Pressure: PN10/16
- Temperature Range: 0℃- 80℃
- Coating: Fusion Bonded Epoxy Coating in accordance with ANSI/AWWA C550

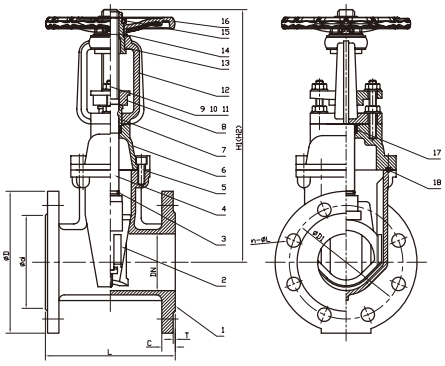

MATERIAL SPECIFICATION

Part No.	Part	Standard Specification	Options
1	Valve Body	EN-GJS-450-10	
2	Resilient Wedge Disc	EN-GJS-450-10+EPDM	
3	O-Ring	NBR	EPDM
4	Stem	Stainless Steel	SS304, SS316, SS420, SS431
5	Bolt	Carbon Steel Zinc Plated	SS304, SS316
6	Bonnet	EN-GJS-450-10	
7	Stem Bushing	Brass Hpb59-1	
8	Gland	EN-GJS-450-10	
9	Flat Washer	Carbon Steel Zinc Plated	SS304，SS316
10	Stud	Carbon Steel Zinc Plated	SS304，SS316
11	Nut	Carbon Steel Zinc Plated	SS304，SS316
12	Yoke	EN-GJS-450-10	
13	Stem Nut	Brass Hpb59-1	
14	Washer	Brass Hpb59-1	
15	Locknut	Carbon Steel Zinc Plated (Type A) Not available (Type B)	
16	Handwheel	EN-GJS-450-10	Pressed Steel
17	Stem Packing	EPDM	NBR
18	Bonnet Gasket	EPDM	NBR

Note: For special material request other than standard specification, please indicate clearly on the inquiry or order list.

DN		PN	Dimensions(mm)										
Inch	mm		L	TypeA		TypeB		D	D1	d	C	T	n-ΦL
				H1(Close)	H2(Open)	H1(Close)	H2(Open)						
2"	50	10/16	178	323	373	348	400	165	125	99	19	3	4-Ø19
2.5"	65	10/16	190	343	408	373	440	185	145	118	19	3	4-Ø19
3"	80	10/16	203	370	450	408	490	200	160	132	19	3	8-Ø19
4"	100	10/16	229	442	542	471	573	220	180	156	19	3	8-Ø19
5"	125	10/16	254	541	665	541	665	250	210	184	19	3	8-Ø19
6"	150	10	267	608	758	593	743	285	240	211	19	3	8-Ø23
8"	200	10	292	720	920	774	975	340	295	266	20	3	8-Ø23
		16											12-Ø23
10"	250	10	330	940	1190	940	1190	405	350	319	22	3	12-Ø23
		16							355				12-Ø28
12"	300	10	356	1065	1370	1065	1370	460	400	370	24.5	4	12-Ø23
		16							410				12-Ø28
14"	350	10	381	1415	1780	1415	1780	516	460	429	26.5	4	16-Φ23
		16							470				16-Φ28
16"	400	10	406	1385	1790	1385	1790	575	515	480	28	4	16-Φ28
		16							525				16-Φ31
18"	450	10	432	1835	2290	1835	2290	635	565	530	30	4	20-Φ28
		16							585	548			20-Φ31
20"	500	10	457	1830	2380	1830	2380	710	620	582	31.5	4	20-Φ28
		16							650	609			20-Φ34
24"	600	10	508	2030	2830	2030	2830	836	725	682	36	5	20-Φ31
		16							770	720			20-Φ37