Pressure Reducing Valve (SK720X), PN25

SK720X

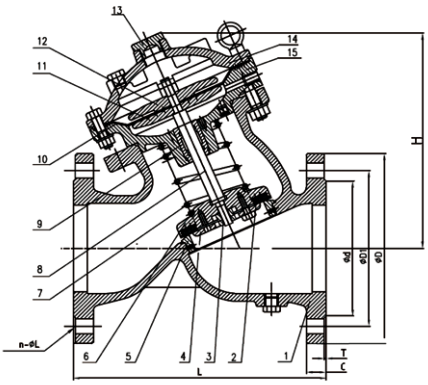

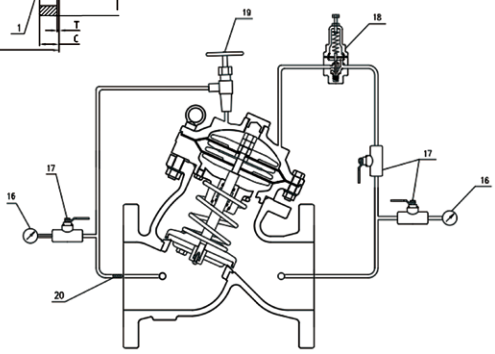

- Design Standard: CJ/T 219，CJ/T 256，JB/T 10674
- Connection Standard: BS EN 1092-2
- Working Pressure: PN25
- Temperature Range: 0℃ - 80℃
- Coating: Fusion Bonded Epoxy Coating inaccordance with ANSI/AWWA C550

MATERIAL SPECIFICATION

Part No.	Part	Standard Specification
1	Valve Body	EN-GJS-450-10
2	Main Gasket	EPDM
3	Disc Head	SS304
4	Gland of Main Disc	EN-GJS-450-10
5	Seat	SS304
6	Main Disc	EN-GJS-450-10
7	Spring	SS304
8	Stem	SS304
9	Bushing	C89833
10	Diaphragm	EPDM
11	Bottom Gland	EN-GJS-450-10
12	Up Gland	EN-GJS-450-10
13	Cap Plug	C89833
14	Up Bonnet	EN-GJS-450-10
15	Middle Bonnet	EN-GJS-450-10
16	Pressure Gauge	assembling unit
17	Ball Valve	assembling unit
18	Pilot Valve	assembling unit
19	Needle Valve	assembling unit
20	Built-in Strainer	assembling unit

Note: For special material request other than standard specification, please indicate clearly on the inquiry or order list.

DN		PN	Dimensions(mm)							
Inch	mm		H	L	D	D1	d	C	T	n-ØL
2"	50	25	170	203	165	125	99	19	3	4-Ø19
2.5"	65	25	195	216	185	145	118	19	3	8-Ø19
3"	80	25	215	241	200	160	132	19	3	8-Ø19
4"	100	25	255	292	235	190	156	19	3	8-Ø23
5"	125	25	290	330	270	220	184	19	3	8-Ø28
6"	150	25	360	356	300	250	211	20	3	8-Ø28
8"	200	25	450	495	360	310	274	22	3	12-Ø28
10"	250	25	550	622	425	370	330	24.5	3	12-Ø31
12"	300	25	645	698	485	430	389	27.5	4	16-Ø31