Grooved Butterfly Valve (D81X4, D381X4), PN10/16

D81X4

CE NSF/ANSI 61 NSF/ANSI 372

- Design Standard: BS EN 593
- Connection Ends: Groove to ISO 6182
- Top Flange Standard: ISO 5211
  Stem drive by keys, parallel or diagonal square or flat head
- Working Pressure: PN10/16
- Temperature Range: 0℃- 80℃
- Coating: Fusion Bonded Epoxy Coating in accordance with ANSI/AWWA C550 or painting upon request

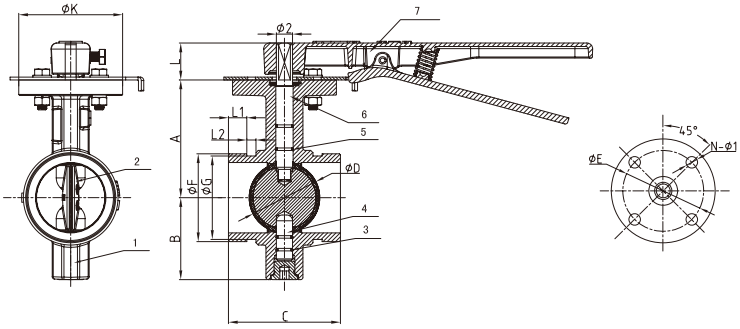

MATERIAL SPECIFICATION

Part No.	Part	Standard Specification	Options
1	Valve Body	EN-GJS-450-10	
2	Disc	EN-GJS-450-10+EPDM	EN-GJS-450-10+NBR
3	O-Ring	NBR	EPDM
4	Stem	Stainless Steel	SS304, SS316, SS420, SS431
5	O-Ring	NBR	EPDM
6	Stem	Stainless Steel	SS304, SS316, SS420, SS431
7	Lever	EN-GJS-450-10	Aluminum
8	Signal Gearbox	EN-GJS-450-10	

Note: For special material request other than standard specification, please indicate clearly on the inquiry or order list.

D381X4

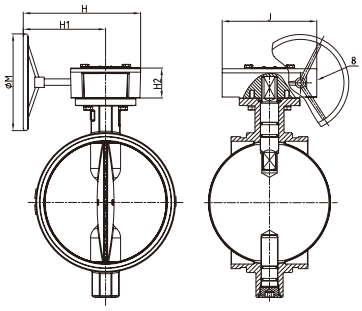

DN		Dimensions(mm)																	
Inch	mm	A	B	C	ΦF	ΦG	L1	L2	L	ΦK	H	H1	H2	J	ΦM	Φ2	ISO 5211	ΦE	N-Φ1
2"	50	89	65	81	60.3	57.15	15.88	7.93	32	90	206	158	52	114	150	14	F07	70	4-Φ10
2.5"	65	102	71	97	73.0	69.09	15.88	7.93	32	90	206	158	52	114	150	14	F07	70	4-Φ10
2.5"	65	102	71	97	76.1	72.26	15.88	7.93	32	90	206	158	52	114	150	14	F07	70	4-Φ10
3"	80	109	81	97	88.9	84.94	15.88	7.93	32	90	206	158	52	114	150	14	F07	70	4-Φ10
4"	100	128	95	116	114.3	110.08	15.88	9.53	32	90	206	158	52	114	150	16	F07	70	4-Φ10
5"	125	141	111	148	139.7	135.48	15.88	9.53	32	90	206	158	52	114	150	16	F07	70	4-Φ10
5"	125	141	111	148	141.3	137.03	15.88	9.53	32	90	206	158	52	114	150	16	F07	70	4-Φ10
6"	150	153	133	148	159.0	154.50	15.88	9.53	32	90	206	158	52	114	150	20	F07	70	4-Φ10
6"	150	153	133	148	165.1	160.9	15.88	9.53	32	90	206	158	52	114	150	20	F07	70	4-Φ10
6"	150	153	133	148	168.3	163.96	15.88	9.53	32	90	206	158	52	114	150	20	F07	70	4-Φ10
8"	200	184	164	133	219.1	214.4	19.05	11.10	45	125	310	239	69	167	300	26	F10	102	4-Φ12
10"	250	216	196	159	273.0	268.28	19.05	12.70	45	125	310	239	69	167	300	26	F10	102	4-Φ12
12"	300	254	226	165	323.9	318.29	19.05	12.70	45	125	307	229	73	190	300	28	F10	102	4-Φ12

Note: Valve must not be installed with disc in full open position. Disc must be partly closed so that no part is protruding beyond end of valve body.